FINN CORPORATION®

Model T75
HydroSeeder®

T75 HydroSeeder Straight Pull Trailer. (T75T)

The FINN T75 HydroSeeder is ideal for landscapers and contractors who need high powered performance and productivity.

One-Man. One-Step. One Powerful Performer.

The T75 HydroSeeder is packaged in a trailer unit with a fully loaded weight of just under 10,000 GVW. You'll enjoy top performance and a clean, operator-friendly design. The T75 provides a one-man, one-step process to seeding, fertilizing, and mulching. With its 820 gallon capacity steel tank, cover 8,700 -10,500 square feet per load with spray distances up to 150 feet from the discharge gun. Features include a hydraulically-controlled paddle agitator and liquid recirculation; agitator controls at each end of the tank for operator convenience; a large toolbox in the hitch for storing hoses and nozzles; and, a FINN-designed centrifugal pump driven by an in-line common shaft clutch that eliminates high maintenance belts and coupling. The rugged, reliable mechanics of the T75 provide long life and easy maintenance. And its low profile allows for easy material loading and excellent stability.

Multiple Applications. Singular Efficiency.

The T75 HydroSeeder offers professional quality hydroseeding, fiber mulching, fertilizing, straw tacking, foliar feeding, dust control, remote watering, and a number of other efficient, cost-effective, and profitable applications. Use the T75 to tackle projects including residential and commercial areas, cemeteries, golf courses, sports fields, parks, office complexes, apartment complexes, condominiums, and more!

Of course, you can always rely on FINN engineering and quality construction as well as toll-free factory support and service. As the world leader for over 70 years in the design and manufacture of innovative, quality equipment for the green industry, FINN Corporation is committed to your complete satisfaction.

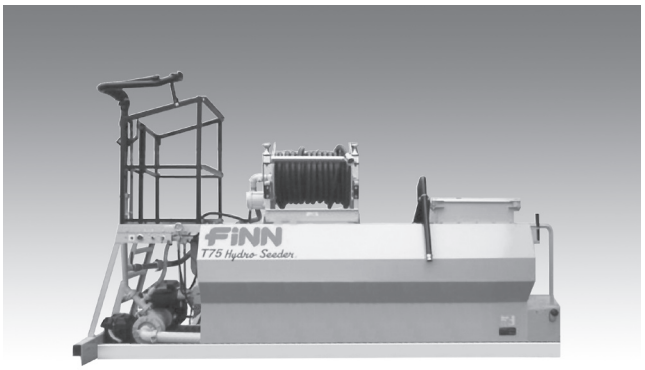

T75 HydroSeeder Skid Mounted. (T75S)

Model shown may include optional equipment.

SMARTER WAYS TO WORK

9281 LeSaint Drive • Fairfield, OH 45014-5457 • Phone (513) 874-2818 • Fax (513) 874-2914
Toll Free (800) 543-7166 • Parts (800) 229-8707 • E-mail: sales@finncorp.com
Customer Service/Warranty (888) 382-1966

FINN®
www.finncorp.com

©2005 FINN Corporation • HydroSeeder® is a registered trademark of the FINN Corporation.

Model T75
HydroSeeder®

T75T TRAILER

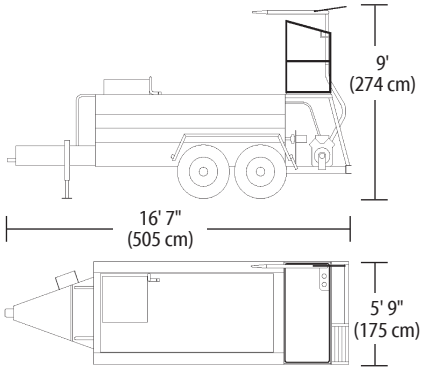

T75S SKID MOUNT

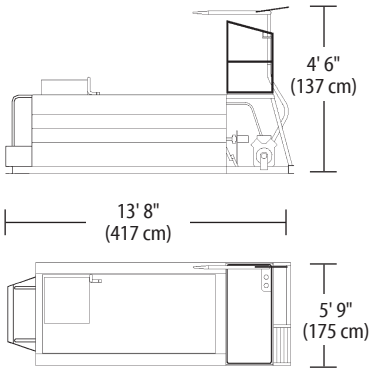

FINN MODEL T75 TECHNICAL SPECIFICATIONS

POWER	Kohler Ch25, 25 hp (18.7 kw), 2 cylinder, OHV, air cooled, gas
ENGINE SAFETY SYSTEM	Low oil pressure, high water temperature shutoff
TANK SIZE	820 gallon (3,100 liter) liquid capacity, 700 gallon (2,650 liter) working capacity
FUEL TANK CAPACITY	10 gallon (38 liter)
PUMP	Centrifugal 3" x 1-1/2" (7.5 cm x 3.75 cm), 135 gpm @ 65 psi (511 liter pm @ 448 kPA) with 3/4" (1.9 cm) solid clearance, adjustable
PUMP DRIVE	Direct drive through electric clutch, pump drive is independent of agitator operation
AGITATION	Mechanical paddle agitation and liquid recirculation
AGITATOR DRIVE	Reversible, variable speed hydraulic motor drive (0-110 rpm), with control lever at front and rear of unit
DISCHARGE DISTANCE	Up to 150 feet (45 m) from end of discharge tower
MAX. MATERIAL CAPACITY	300 lbs. (136 kg) to 350 lbs. (159 kg) fiber mulch
NOZZLES	(1) narrow fan, (1) wide fan, (2) long distance
EMPTY WEIGHT	T75T 3,250 lbs. (1,477 kg) T75S 2,450 lbs. (1,114 kg)
WORKING WEIGHT*	T75T 9,990 lbs. (4,541 kg) T75S 9,190 lbs. (4,177 kg)
BRAKES	Electric with break-away switch
LIGHTS	D.O.T., including identification lights and license plate bracket
TIRES	ST225/75R15 load range D highway tread
TRAILER AXLES	Tandem 5,000 lbs. (2,273 kg) rubber torsion with fenders
HITCH	2 5/16" (5.87 cm) ball or heavy-duty lunette eye Includes large storage area in tongue
HITCH WEIGHT	Approx. 1,400 lbs. (636 kg) maximum loaded

*Working weights are approximate and do not include options or stored materials.

FINN Corporation has a policy of continuous product improvement, and reserves the right to change design and specifications without notice.

HydroSeeder® is a registered trademark of the FINN Corporation.

9281 LeSaint Drive
Fairfield, OH 45014-5457

Toll Free (800) 543-7166
E-mail: sales@finncorp.com
www.finncorp.com