For additional information or to find your nearest dealer go to:

www.catelectricpowerinfo.com/rg

LEXE7582-02

December 2009

© 2009 Caterpillar All Rights Reserved Printed in USA
CAT, CATERPILLAR, their respective logos, ACERT, ADEM, "Caterpillar Yellow" the "Power Edge" trade dress, as well as corporate and product identity used herein, are trademarks of Caterpillar and may not be used without permission.

CATERPILLAR®

TODAY'S WORK. TOMORROW'S WORLD.™

ELECTRIC POWER RATINGS GUIDE

Generator Sets

CATERPILLAR®

CONTENTS

RATINGS GUIDE

Cat® Diesel Generator Sets

- 50 Hz Ratings 4
- 60 Hz Ratings 6
- Rental Power Ratings 9
- Definition of Diesel Ratings 10

Cat® Gas Generator Sets

- 50 Hz Ratings 14
- 60 Hz Ratings 16
- Definition of Gas Ratings 19

Conversion Tables 22

Product Support Definitions 33

Product Support - Customer Support Agreements 34

Note Pages 36

CAT® GENERATOR SETS

DIESEL

CAT® 50 Hz DIESEL RATINGS, 275 kVA - 3100 kVA

kVA Standby	kVA Prime	kVA Continuous	Generator Set Model	Configuration
1500 rpm				
300	275	–	3406C	Low BSFC
350	320	–	3406C	Low BSFC
400	365	–	3406C	Low BSFC
400	365	–	C15 ACERT™	EU Stage II, Low BSFC
450	410	–	C15 ACERT	EU Stage II, Low BSFC
500	455	–	C15 ACERT	EU Stage II, Low BSFC
550	500	–	C15 ACERT	EU Stage II, Low BSFC
600	545	–	C18 ACERT	Low BSFC
605	550	–	C18 ACERT	EU Stage II
650	591	–	C18 ACERT	EU Stage II, Low BSFC,
700	635	–	C18 ACERT	Low BSFC
750	680	–	3412C	Low BSFC
800	725	–	3412C	Low BSFC
900	810	–	3412C	Low BSFC
1100	1000	910	C32 ACERT	Low BSFC, Low Emissions
1250	1150	1000	3512	Low BSFC
1400	1275	1206	3512	Low BSFC
1500	1360	1320	3512B	Low BSFC, Low Emissions
1600	1450[1]	–	3512B	Low BSFC, Low Emissions
1600	1500[2]	–	3512B	Low BSFC, Low Emissions
1750	1600	1500	3512B-HD	Low BSFC, Low Emissions
1875	1700	–	3512B-HD	Low BSFC, Low Emissions
2000	1825	1600	3516	Low BSFC
2250	2000	1750	3516B	Low BSFC, Low Emissions
2500	2275	2000	3516B-HD	Low BSFC, Low Emissions
3000	2725	2500	C175-16	Low BSFC
3100*	2825*	2600*	C175-16	Low BSFC

[1] For voltages less than 5,000 volts
[2] For voltages greater than 5,000 volts
*Rating does not include package mounted radiator

DIESEL
50 Hz

CAT 50 Hz DIESEL RATINGS, 2200 kVA - 17463 kVA

kVA Standby	kVA Prime	kVA Continuous	Generator Set Model	Configuration
1000 rpm				
2688	2425	2200	3606	–
3575	3250	2938	3608	–
5375	4850	4400	3612	–
7150	6500	5875	3616	–
750 rpm				
2163	1963	1775	3606	–
2863	2600	2363	3608	–
4325	3925	3550	3612	–
5725	5200	4725	3616	–
–	–	6988	12CM32	–
–	–	9313	16CM32	–
600 rpm				
–	–	3456	6CM32	–
–	–	4656	8CM32	–
–	–	5238	9CM32	–
500 rpm				
–	–	6550	6CM43	–
–	–	7638	7CM43	–
–	–	8725	8CM43	–
–	–	9825	9CM43	–
–	–	13094	12CM43	–
–	–	17463	16CM43	–

CAT 60 Hz DIESEL RATINGS, 12 ekW - 175 ekW

Available only for North America

ekW Standby	ekW Prime	Generator Set Model	Engine	Configuration
Single Phase Output* 1800 rpm				
13	12	D13-4S	C1.5	EPA Tier 4 Interim
20	18	D20-6S	C2.2	EPA Tier 4 Interim
25	22	D25-8S	C2.2	EPA Tier 4 Interim
30	27	D30-8S	C2.2	EPA Tier 4 Interim
40	36	D40-6S	C4.4	EPA Tier 3
50	45	D50-6S	C4.4	EPA Tier 3
60	54	D60-8S	C4.4	EPA Tier 3
80	72	D80-6S	C4.4	EPA Tier 3
100	90	D100-6S	C4.4	EPA Tier 3
3-Phase Output 1800 rpm**				
13	12	D13-4	C1.5	EPA Tier 4 Interim
18	16	D18-4	C2.2	EPA Tier 4 Interim
20	18	D20-6	C2.2	EPA Tier 4 Interim
25	22	D25-8	C2.2	EPA Tier 4 Interim
30	27	D30-10	C2.2	EPA Tier 4 Interim
40	36	D40-6	C4.4	EPA Tier 3
50	45	D50-6	C4.4	EPA Tier 3
60	55	D60-6	C4.4	EPA Tier 3
80	72	D80-6	C4.4	EPA Tier 3
100	90	D100-6	C4.4	EPA Tier 3
125	114	D125-6	C6.6	EPA Tier 3
150	136	D150-8	C6.6	EPA Tier 3
175	158	D175-2	C6.6	EPA Tier 3

*All ratings at 1.0 pf **All ratings at 0.8 pf

CAT 60 Hz DIESEL RATINGS, 180 ekW - 250 ekW

ekW Standby	ekW Prime	ekW Continuous	Generator Set Model	Configuration
1800 rpm				
200	180	–	C9 ACERT™	EPA Tier 3
230	210	–	3306B	Low BSFC
250	225	–	3306B	Low BSFC
250	225	–	C9 ACERT™	EPA Tier 3

DIESEL
60 Hz

CAT 60 Hz DIESEL RATINGS, 275 ekW - 3100 ekW

ekW Standby	ekW Prime	ekW Continuous	Generator Set Model	Configuration
1800 rpm				
300	275	–	C9 ACERT™	EPA Tier 3
300	275	–	3406C	Low BSFC
350	320	–	3406C	Low BSFC
350	320	–	C15 ACERT	EPA Tier 3, Low BSFC
400	365	–	3406C	Low BSFC
400	365	–	C15 ACERT	EPA Tier 3, Low BSFC
450	410	–	C15 ACERT	EPA Tier 3, Low BSFC
500	455	–	C15 ACERT	EPA Tier 2, Low BSFC
550 (ESP)	–	–	C15 ACERT	EPA Tier 2, Low BSFC
550	500	–	C18 ACERT	EPA Tier 2, Low BSFC
600	545	–	C18 ACERT	EPA Tier 2, Low BSFC
650	591	–	C27 ACERT	EPA Tier 2, Low BSFC
700	635	–	C27 ACERT	EPA Tier 2, Low BSFC
750	680	–	C27 ACERT	EPA Tier 2, Low BSFC
800	725	–	C27 ACERT	EPA Tier 2, Low BSFC
1000	910	830	C32 ACERT	EPA Tier 2, Low BSFC
1100	1000	890	3512	Low BSFC
1250	1135	1010	3512	Low BSFC
1400	1275	1230	3512B	Low BSFC, Low Emissions
1500	1360	1230	3512B	Low BSFC, Low Emissions
1500	1360	1230	3512C	EPA Tier 2
1750	1600	1450	3516	Low BSFC
2000	1825	1640	3516B	Low BSFC, Low Emissions
2000	1825	1650	3516C	EPA Tier 2
2250	–	–	3516B	EPA Tier 1, Low BSFC
2500	2250	2050	3516C-HD	EPA Tier 2
3000	2725	2500	C175-16	Low BSFC, EPA Tier 2
3100*	2825*	2600*	C175-16	Low BSFC, EPA Tier 2

(ESP) Emergency Standby Rating
*Rating does not include package mounted radiator

CAT 60 Hz DIESEL RATINGS, 1650 ekW - 13970 ekW

ekW			Generator Set	
Standby	Prime	Continuous	Model	Configuration
			900 rpm	
2000	1820	1650	3606	–
2660	2420	2200	3608	–
4000	3640	3300	3612	–
5320	4840	4400	3616	–
			720 rpm	
1680	1525	1375	3606	–
2200	2020	1830	3608	–
3360	3050	2750	3612	–
4400	4040	3660	3616	–
–	–	5590	12CM32	–
–	–	7450	16CM32	–
			600 rpm	
–	–	2765	6CM32	–
–	–	3725	8CM32	–
–	–	4190	9CM32	–
			514 rpm	
–	–	5240	6CM43	–
–	–	6110	7CM43	–
–	–	6980	8CM43	–
–	–	7860	9CM43	–
–	–	10475	12CM43	–
–	–	13970	16CM43	–

CAT 60 Hz RENTAL POWER RATINGS, 18 ekW - 2000 ekW

ekW			Rental Generator	
Standby	Prime	Continuous	Model	Configuration
			1800 rpm	
20	18	–	XQ20	EPA Tier 4 Interim
30	27	–	XQ30	EPA Tier 4 Interim
45	41	–	XQ45	EPA Tier 3
60	54	–	XQ60	EPA Tier 3
80	70	–	XQ80	EPA Tier 3
100	90	–	XQ100	EPA Tier 3
175	158	–	XQ175	EPA Tier 3
230*	210	–	XQ230	EPA Tier 3
300*	275	–	XQ300	EPA Tier 3
400*	365	–	XQ400	EPA Tier 3
600	545	–	XQ600	EPA Tier 2
1000*	910	–	XQ1000	EPA Tier 2
1000	910	–	PM1000	EPA Tier 2
1000	910	–	RC1000	EPA Tier 2
2000*	1825	–	XQ2000	EPA Tier 2

*Also available at 50 Hz

DIESEL
RATINGS DEFINITIONS

CAT DIESEL RATING DEFINITIONS

Emergency Standby Power (ESP)
Output available with varying load for the duration of an emergency outage. Average power output is 70% of the emergency standby power rating. Typical operation is 50 hours per year with maximum expected usage of 200 hours per year. Standby power in accordance with ISO8528. Fuel stop power in accordance with ISO3046.

Standby Power
Output available with varying load for the duration of the interruption of the normal source power. Average power output is 70% of the standby power rating. Typical operation is 200 hours per year, with maximum expected usage of 500 hours per year. Fuel stop power in accordance with ISO3046.

Prime Power
Output available with varying load for an unlimited time. Average power output is 70% of the prime power rating. Typical peak demand of 100% of prime-rated ekW with 10% of overload capability for emergency use for a maximum of 1 hour in 12. Overload operation cannot exceed 25 hours per year. Prime power in accordance with ISO8528. Fuel stop power in accordance with ISO3046.

Continuous Power
Output available without varying load for an unlimited time. Average power output is 70 - 100% of the continuous power rating. Typical peak demand is 100% of continuous rated ekW for 100% of operating hours. Continuous power is in accordance with ISO8528. Fuel stop power in accordance with ISO3046.

CAT GENERATOR SETS

GAS

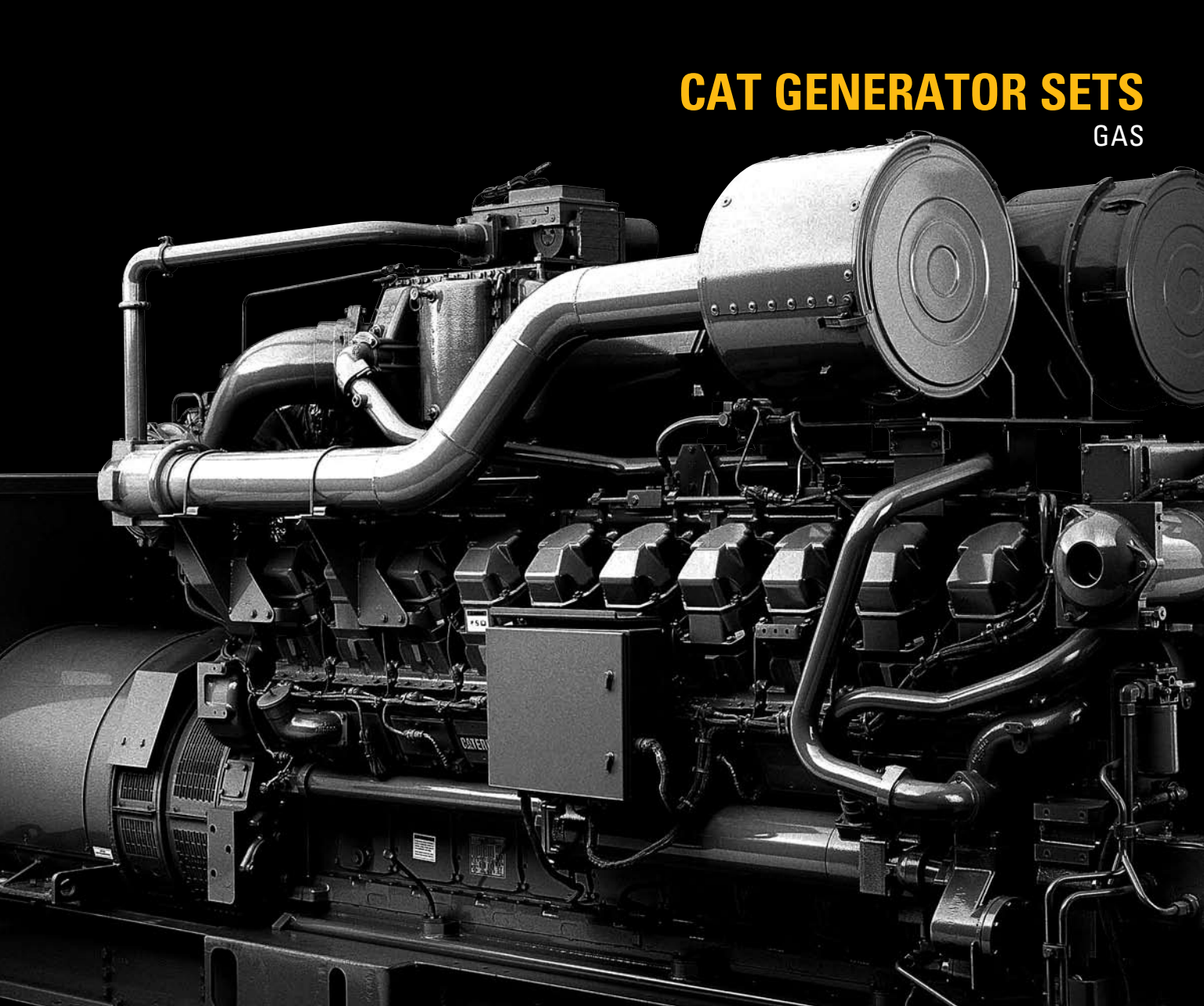

CAT 50 Hz CONTINUOUS GAS RATINGS, 80 kVA - 1431 kVA

kVA 1000 rpm	kVA 1500 rpm	Natural Gas	Propane	Low Energy Gas
–	80	–	–	G3306 NA†††
–	83	–	–	G3306 NA†††
–	87	G3306 NA	–	–
–	106	G3306 NA		–
–	129	–	–	G3406 NA†††
–	133	–	–	G3406 NA†††
–	138	G3306 TA	–	–
–	156	G3306 TA	–	–
–	156	G3406 NA	–	–
–	200	G3406 TA	–	–
–	205	–	–	G3412 NA†††
–	215	–	–	G3412 NA†††
–	350	G3412 TA	–	–
–	450	G3412C LE	–	–
–	450	4006-23TR	–	4006-23TR
–	600	G3508 LE	–	–
–	619	G3508 LE	–	–
–	620	4008-30TR52	–	4008-30TR52
–	631	G3508 LE	–	–
–	637	G3508 LE	–	–
–	906	G3512 LE	–	–
–	931	G3512 LE	–	–
–	962	–	–	G3512 LE†, †††
–	963	G3512 LE	–	–
–	1000	G3512E	–	–
–	1200	G3512E	–	–
–	1218	G3516 TA	–	–
–	1287	G3516 TA	–	–
–	1287	G3516 LE	–	G3516 LE†, ††
–	1356	G3516B	–	–
–	1380	G3516B	–	–
–	1431	G3516B	–	–

† Landfill
†† Coal Mine Methane
††† Non-Landfill Biogas

GAS
50 Hz

CAT 50 Hz CONTINUOUS GAS RATINGS, 1606 kVA - 8150 kVA

kVA 750 rpm	kVA 1000 rpm	kVA 1500 rpm	Natural Gas	Propane	Low Energy Gas
–	1606	–	G3606	–	–
–	1712	–	G3606	–	–
–	–	1944	G3516C IM*	–	–
–	–	1944	G3516C	–	–
–	–	1975	G3516C	–	–
–	–	1986	G3516C	–	–
–	2143	–	G3608	–	–
–	2281	–	G3608	–	–
–	–	2438	G3520C	–	–
–	–	2458	G3520C IM*	–	G3520C†, ††, †††
–	3212	–	G3612	–	–
–	3425	–	G3612	–	–
–	3593	–	G3612	–	–
–	3625	–	G3612	–	–
–	4281	–	G3616	–	–
–	4562	–	G3616	–	–
–	4825	–	G3616	–	–
8150	–	–	G16CM34	–	–

*IM Island Mode

CAT 50 Hz CONTINUOUS CHP GAS RATINGS, 1380 kVA - 2500 kVA

kVA 1000 rpm	kVA 1500 rpm	Natural Gas	Propane	Low Energy Gas
–	1380	G3516B	–	–
–	1456	G3516B	–	–
–	2000	G3516E	–	–
–	2500	G3520C	–	–
–	2500	G3520E	–	–

CAT 60 Hz STANDBY GAS RATINGS, 150 kW - 1040 kW

kW 1000 rpm	kW 1800 rpm	Natural Gas	Propane	Low Energy Gas
–	150	G3406 NA	–	–
–	240	G3406 TA	–	–
–	260	G3406 TA	–	–
–	275	G3406 TA	–	–
–	350	G3412 TA	–	–
–	375	G3412C LE	–	–
–	410	–	G3412 TA	–
–	435	G3412 TA	–	–
–	445	–	G3412 TA	–
–	450	G3412 TA	–	–
–	460	G3412 TA	–	–
–	470	G3412 TA	–	–
–	480	G3412 TA	–	–
–	495	G3412 TA	–	–
–	515	G3412 TA	–	–
–	1040	G3516 LE	–	–

CAT 60 Hz CONTINUOUS GAS RATINGS, 72 kW - 150 kW

kW 1200 rpm	kW 1800 rpm	Natural Gas	Propane	Low Energy Gas
–	72	–	–	G3306 NA[†††]
–	75	–	–	G3306 NA[†††]
–	85	G3306 NA	–	–
–	100	G3306 NA	–	–
–	132	–	–	G3406 NA[†††]
–	135	G3306 TA	–	–
–	137			G3406 NA[†††]
–	140	G3306 TA	–	–
–	150	G3306 TA	–	–

[†††] Non-Landfill Biogas

CAT 60 Hz CONTINUOUS GAS RATINGS, 150 kW - 820 kW

kW 1200 rpm	kW 1800 rpm	Natural Gas	Propane	Low Energy Gas
–	150	G3406 NA	–	–
–	177	–	–	G3412 NA[†††]
–	190	G3406 TA	–	–
–	191	–	–	G3412 NA[†††]
–	350	G3412 TA	G3412 TA	
360	–	G3508 LE	–	–
370	–	G3508 LE	G3412 TA	–
370	–	G3508 TA	–	–
–	375	G3412 TA	G3412 TA	–
–	375	G3412C LE	–	–
375	–	G3508 LE	–	–
380	–	G3508 TA	–	–
385	–	G3508 LE	–	–
390	–	G3508 LE	–	–
400	–	G3508 LE	–	–
555	–	G3512 TA	–	–
560	–	G3512 TA	–	–
570	–	G3512 TA	–	–
570	–	G3512 LE	–	–
585	–	G3512 LE	–	–
600	–	G3512 LE	–	–
695	–	–	G3516 LE	–
735	–	–	G3516 LE	–
750	–	G3516 TA	–	–
755	–	G3516 TA	–	–
770	–	G3516 TA	–	–
770	–	G3516 LE	–	–
795	–	G3516 LE	–	–
815	–	–	–	G3516 LE[†,†††]
820	–	G3516 LE	–	–

[†] Landfill
[†††] Non-Landfill Biogas

CAT 60 Hz CONTINUOUS GAS RATINGS, 1155 kW - 6520 kW

kW 720 rpm	kW 900 rpm	kW 1200 rpm	kW 1800 rpm	Natural Gas	Low Energy Gas
–	1155	–	–	G3606	–
–	1235	–	–	G3606	–
–	–	–	1300	G3516B	–
–	–	–	1400	G3516B	–
–	1540	–	–	G3608	–
–	–	1600	–	G3520C	G3520C †, †††
–	1640	–	–	G3608	–
–	–	–	1660	G3516C	–
–	–	–	1900	G3520C	–
–	–	–	2055	G3520C	–
–	–	–	2055	G3520C IM*	–
–	2310	–	–	G3612	–
–	2315	–	–	G3612	–
–	2335	–	–	G3612	–
–	2465	–	–	G3612	–
–	2595	–	–	G3612	–
–	2615	–	–	G3612	–
–	3080	–	–	G3616	–
–	3105	–	–	G3616	–
–	3285	–	–	G3616	–
–	3480	–	–	G3616	–
6520	–	–	–	G16CM34	–

*IM Island Mode

† Landfill
††† Non-Landfill Biogas

CAT GAS RATING DEFINITIONS

Standby Power
These ratings are applicable for supplying continuous electrical power (at variable load) in the event of a utility power failure. No overload is permitted on these ratings. Natural gas ratings have been established on natural gas with net calorific Low Heat Value (LHV) of approximately 35.6 MJ/m^3 (905 Btu/ft^3) and 80 methane number (MN).

Continuous Power
Output available without varying load for an unlimited time. Continuous power in accordance with ISO8528, AS2789, and BS5514. Natural gas ratings have been established on natural gas with net calorific Low Heat Value (LHV) of approximately 35.6 MJ/m^3 (905 Btu/ft^3) and 80 methane number (MN).

CONVERSIONS

RATINGS GUIDE

FUEL SYSTEM - DIESEL

Day Tank Sizing

$$\text{Tank Size (gal)} = \frac{\text{Rated BSFC (lb/hp•hr)}}{\text{7.076 (lb/gal)}} \times \text{Rated HP} \times \text{Load Factor}$$

x Hours Between Refilling
+ Reserve Requirement

OR

Rule of Thumb for tank size with 25% reserve

0.056 x Ave. BHP demand x Hours between refills x 1.25 = _____gal.
0.27 x Ave. BKW demand x Hours between refills x 1.25 = _____liters.

Note: Additional tank capacity required for cooling of recirculated fuel in unit-injected engines. Tank should be located below level of injectors or nozzles.

On-Site Power Requirements

Based on 100,000 sq ft. of office bldg., etc and 40°N. Latitudes

- Electric Requirements
  600 kW continuous load
  (Air conditioning is absorption)
  Use three - 300kW units
  (2 prime and 1 standby)
- Air Conditioning and Compressor
  400 tons prime load
  Use two - 200 hp engines
  (No Standby)

Refrigeration

- One ton refrigeration = 200 Btu/min = 12,000 Btu/h
- One Boiler hp = 33,475 Btu/h
- One ton compressor rating = One engine hp
- Auxiliary air conditioning equipment requires 1/4 hp/ton of compressor rating

Ice Plant

- Complete power requires 4-5 hp per daily ton capacity

Air Compressor

- hp = 1/4 x cu ft m/min at 100 psi
  Increase bhp 10% for 125 psi
  Decrease bhp 10% for 80 psi

ELECTRICAL TABLES

To Obtain	Alternating Current Single-Phase	Alternating Current Three-Phase	Direct Current
kW	$\frac{V \times I \times P.F.}{1000}$	$\frac{1.732 \times V \times I \times P.F.}{1000}$	$\frac{V \times I}{1000}$
kVA	$\frac{V \times I}{1000}$	$\frac{1.732 \times V \times I}{1000}$	
Horsepower required when kW known (Generator)	$\frac{kW}{.746 \times EFF. (Gen)}$	$\frac{kW}{.746 \times EFF. (Gen)}$	$\frac{kW}{.746 \times EFF. (Gen)}$
kW input when HP known (Motor)	$\frac{HP \times .746}{EFF. (Mot.)}$	$\frac{HP \times .746}{EFF. (Mot.)}$	$\frac{HP \times .746}{EFF. (Mot.)}$
Ampheres when HP known	$\frac{HP \times .746}{V \times P.F. \times EFF.}$	$\frac{HP \times .746}{1.732 \times V \times EFF. \times P.F.}$	$\frac{HP \times .746}{V \times EFF.}$
Ampheres when kW known	$\frac{kW \times 1000}{V \times P.F.}$	$\frac{kW \times 1000}{1.732 \times V \times P.F.}$	$\frac{kW \times 1000}{V}$
Ampheres when kVA known	$\frac{kVA \times 1000}{V}$	$\frac{kVA \times 1000}{1.732 \times V}$	
Frequency Hz	$\frac{Poles \times RPM}{120}$	$\frac{Poles \times RPM}{120}$	
Reactive kVA (kVAr)	$\frac{V \times I \times \sqrt{1-(P.F.)^2}}{1000}$	$\frac{1.732 \times V \times I \times \sqrt{1-(P.F.)^2}}{1000}$	
% Voltage Regulation	$\frac{100\,(V_{NL}-V_{FL})}{V_{FL}}$	$\frac{100\,(V_{NL}-V_{FL})}{V_{FL}}$	$\frac{100\,(V_{NL}-V_{FL})}{V_{FL}}$

ELECTRICAL TABLE ABBREVIATIONS:

V - voltage in volts
I - current in ampheres
kW - power in kilowatts (actual power)
kVA - kilovolt-ampheres (apparent power)
HP - horsepower
RPM - revolutions per minute
kVAr - reactive kilovolt-ampheres
EFF. - efficiency as a decimal factor
NL - no load
FL - full load
P.F. - power factor
Note: DC kW = DC kVA

THREE-PHASE CONNECTION SYSTEMS

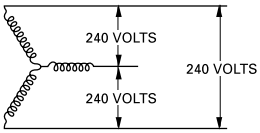

THREE-PHASE, THREE-WIRE (WYE)
A

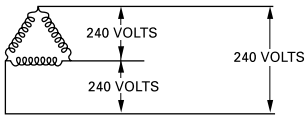

THREE-PHASE, THREE-WIRE (DELTA)
B

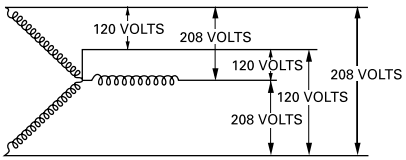

THREE-PHASE, FOUR-WIRE (WYE)
C

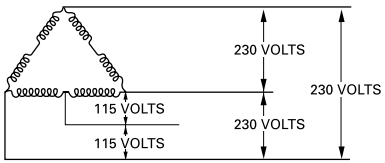

THREE-PHASE, FOUR-WIRE (DELTA)
D

CONVERSIONS

REDUCED VOLTAGE STARTERS

Type of Starter	Motor Voltage (% Line Voltage)	Line Current (% Full Voltage) Starting Current	Starting Torque (% of Full Voltage) Starting Torque
Full Voltage Starter	100	100	100
Auto Transformer • 80% Tap • 65% Tap • 50% Tap	 80 65 50	 68 46 30	 64 42 25
Resistor Starter Single Step (adjusted for motor voltage to be 80% of line voltage)	80	80	64
Reactor • 50% Tap • 45% Tap • 37.5% Tap	 50 45 37.5	 50 45 37.5	 25 20 14
Part Winding (low-speed motors only) • 75% Winding • 80% Winding	 100 100	 75 50	 75 50

COMPARISON OF REDUCED VOLTAGE STARTING METHODS

Characteristic	Autotransformer	Primary Resistor	Reactor	Two-Step Part Winding
Starting Line Current at Same Motor Terminal Voltage	Least	—— More than autotransformer type ——		
Starting Power Factor	Low	High*	Low	Low
Power Draw from Line During Starting	Low	—— More than autotransformer type ——		
Torque	Increases slightly with speed	Increases rapidly with speed		Increases slightly with speed
Smoothness of Acceleration	Motor momentarily disconnected from line from start to run	Smooth. Transfer made with little change in motor terminal voltage		Smooth
Relative Cost	Average	Lower in small size-otherwise equal	Average	Less than others
Ease of Control	Same	Same	Same	No provision for adjustment of starting current
Maintenance	Same	Same	Same	Less than others
Line Disturbance	—— Varies with conditions and type of load ——			More than others

*Resistor starting adds considerable kW load to generator set. Total power required includes the motor kW and the kW which is lost as heat in the resistor. The series resistors account for a higher than normal starting power factor.

CONVERSIONS

ENGINE ROOM VENTILATION

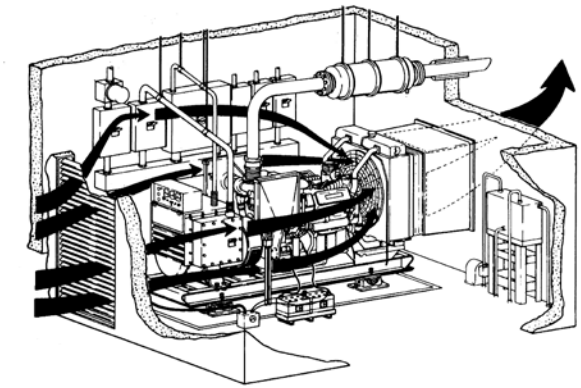

Engine room ventilation can be estimated by the following formulas, assuming 100°F (38°C) ambient air temperature:

$$V\ (\text{cfm}) = \frac{H}{0.070 \times 0.24 \times \Delta T} + \text{Engine Combustion Air}$$

$$V\ (\text{m}^3/\text{min}) = \frac{H}{1.099 \times 0.017 \times \Delta T} + \text{Engine Combustion Air}$$

V = Ventilation air (cfm) (m^3/min).
H = Heat radiation (Btu/min) (kW).
ΔT = Permissible temperature rise in engine room (°F) (°C).
Density of air at 100°F = 0.070 lb/cu ft (1.099 kg/m^3).
Specific heat of air = 0.24 Btu/°F (0.017 kW/°C).

CONVERSION FACTORS

Length							
Unit	mm	in	ft	yd	m	km	mi
mm	1	.03937	.003281	.001094	.001	.0000 01	–
in	25.4	1	0.083 33	0.027 78	0.0254	0.000 03	–
ft	304.8	12	1	0.333 33	0.3048	0.000 30	–
yd	914.4	36	3	1	0.9144	0.000 91	–
m	1000	39.3701	3.280 84	1.093 61	1	0.001	0.000 62
km	100 0000	39 370.1	3208.84	1093.61	1000	1	0.621 37
mi	160 9340	63 360	5280	1760	1609.34	1.609 34	1

Area				
Unit	mm^2	in^2	m^2	ft^2
mm^2	1	0.00155	–	–
in^2	645.16	1	0.000 645 16	0.006 944
m^2	10 00000	1550	1	10.764
ft^2	92903	144	0.0929	1

1 sq mile = 640 acres
1 acre = 4840 yd^2

1 cir mil = 7.854 x $10^{-7}in^2$
1 cir mil = .7854 x $mils^2$

1 cir mil = 5.067 x $10^{-6}cm^2$

Weight						
		Ounces	Pounds	—— Tons ——		
Unit	Kilograms	Avoirdupois	Avoirdupois	Short	Long	Metric
1 Kilogram	1	35.27	2.205	–	–	–
1 Ounce	0.02835	1	0.0625	–	–	–
1 Pound	0.4536	16	1	–	–	–
1 Short Ton	907.2	32,000	2,000	1	0.8929	0.9072
1 Long Ton	1,016	35,840	2,240	1.12	1	1.016
1 Metric	1,000	35,300	2,205	1.102	0.9842	1

1 grain = 0.064799 gram

CONVERSIONS

CONVERSION FACTORS

Flow					
Unit	U.S. gal/min	million U.S. gal/day	ft^3/s	m^3/h	L/s
U.S. gpm	1	0.001 440	0.002 23	0.2270	0.0631
1 million gal/day	694.5	1	1.547	157.73	43.8
ft^3/s	448.8	0.0646	1	101.9	28.32
m^3/h	4.403	0.006 34	0.009 81	1	0.2778
L/s	15.85	0.0228	0.0353	3.60	1

MCFD = 1000 ft^3/day

MMCFD = 1,000,000 ft^3/day

lb/bhp-hr x 607.73 = g/kW-hr

Energy						
Unit	BTU	Cal	ft-lb	J	Kcal	Therm
BTU	1	252	778	1055.056	0.252	0.00001
Calorie	0.00397	1	3.08866	4.187	0.001	–
Foot-Pound	0.001285	0.323765	1	1.356	0.003089	–
Joule	0.000948	0.23895	0.73745	1	0.000239	–
Kilocalorie	3.96825	1000	3089	4185	1	2.519
Therm	100,000	396.8254	128.5347	94.78169	0.39682	1

1 Therm = 1,000,000 Btu
Btu/ft^2/min = 0.1220 Watts/in^2

Btu/ft^3 = 8.899 kg-cal/m^3
Btu/lb = .5556 kg-cal/kg

CONVERSIONS

CONVERSION FACTORS

CONVERSION FACTORS

Volume and Capacity

Unit	in^3	ft^3	yd^3	mm^3	m^3	U.S. gal	Imp gal	liter
in^3	1	0.000 58	0.000 02	16387.1	0.000 02	0.004 32	0.003 61	0.01639
ft^3	1728	1	0.037 04	28 320 000	0.028 32	7.480 52	5.228 83	28.3169
yd^3	46656	27	1	764 554 858	0.76455	201.974	168.178	764.555
mm^3	6.1×10^{-5}	4.0×10^{-8}	–	1	–	2.6×10^{-7}	2.2×10^{-7}	1.0×10^{-6}
m^3	61 023.7	35.3147	1.307 95	1,000,000,000	1	264.192	219.969	1000
U.S.gal	231	0.133 68	0.004 95	3785420	0.003 78	1	–	3.785 41
Imp gal	277.419	0.160 54	0.005 95	4540090	0.004 55	1.200 95	1	4.546 09
liter	61.023 7	0.035 31	0.001 31	1000 000	0.001	0.264 17	0.219 97	1
acre-ft	–	43 560	1613.33	–	1233.48	325 851	271 335	–

1 board-foot = 144 in^3 1 bushel = 1.244 ft^3 1 bushel = 4 pecks

Power

Unit	Btu/min	ft-lb/min	hp	J/min	Metric hp	kW	W
Btu/min	1	778.2	0.02358	1055.000	0.02391	0.0175843	17.5843
ft-lb/min	0.00128	1	0.00003	1.3504	0.00003	0.0000226	0.0226
Horsepower	42.456	33000	1	44791	1.014	0.74570	745.7
Joules/min	0.00095	0.7405	0.0000223	1	0.0000226	0.0000166	0.016668
Metric hp	41.827	32550	0.98632	44127	1	0.73549	735.498
Kilowatt	59	44250	1.34102	59997	1.35962	1	1000
Watt	0.05687	44.25	0.00134	59.9968	0.00136	0.001	1

Pressure and Head

Unit	mm/Hg (0°C)	in./Hg (0°C)	in. H20 (60°F)	ft. H20 (60°F)	lb/in^2	kg/cm^2	bar	Atmospheres 101.4Pa (14.7 psi)	kPa
mm/Hg	1	0.039 37	0.5357	0.04464	0.019 34	0.001 36	0.001 33	0.001 315	–
in./Hg	25.4	1	13.61	1.134	0.491 15	0.034 53	0.033 86	0.033 42	–
in. H_20	1.868 27	0.07 355	1	0.083 33	0.036 13	0.002 54	0.002 49	0.002 46	0.249
ft. H_20	22.4192	0.882 65	12	1	0.433 52	0.030 479	0.029 89	0.029 50	2.989
lb/in^2	51.7149	2.036 02	27.70	2.309	1	0.070 31	0.068 95	0.068 05	6.895
kg/cm^2	735.559	28.959	395	32.84	14.2257	1	0.980 67	0.967 84	98.067
bar	750.062	29.530	401.8	33.49	14.504	1.019 72	1	0.98692	101.325
kPa	7.500 62	0.295 30	4.01835	0.33486	0.145 038	0.010 1972	0.010 000	0.009 869 20	1

CONVERSIONS

CONVERSION FACTORS

Temperature Conversion

°F = (1.8 x °C) + 32
°C = 0.5555 (°F - 32)

Angle

1 quadrant = 90 degrees
1 quadrant = 1.57 radians
1 radian = 57.3 degrees
1 degree = 60 minutes
1 minute = 2.9 x 10 radians

Identifying Code Letters on AC Motors	
NEMA Code Letter	**Starting skVA/hp**
A	0.00 - 3.14
B	3.15 - 3.54
C	3.55 - 3.99
D	4.00 - 4.49
E	4.50 - 4.99
F	5.00 - 5.59
G	5.60 - 6.29
H	6.30 - 7.09
J	7.10 - 7.99
K	8.00 - 8.99
L	9.00 - 9.99
M	10.00 - 11.19
N	11.20 - 12.49
P	12.50 - 13.99
R	14.00 - 15.99
S	16.00 - 17.99
T	18.00 - 19.99
U	20.00 - 22.39
V	22.40

Note: Code letters apply to motors up to 200 HP.

PRODUCT SUPPORT

PRODUCT SUPPORT DEFINITIONS

Extended Service Coverage (ESC)

Depending on the engine model and application, Silver, Gold or Platinum & Platinum Plus coverage levels are available from Cat Insurance with terms extended up to 60 months and 25,000 hours.

Equipment	Coverage Option
New engines	ESC
Used engines	Advantage
Overhauls	OPC*

Electric Power Extended Service Coverage reimburse 100% of the parts at customer list price, labor at selling rates and travel & mileage charges (less any deductibles) for covered repairs.

Available worldwide, Extended Service Coverage (ESC) provides 100% of usual and customary parts and labor costs for system failures due to defects in materials and workmanship on covered components over the duration of the agreement period.

*Overhaul protection coverage

PRODUCT SUPPORT

CUSTOMER SUPPORT AGREEMENTS

CUSTOMER SUPPORT AGREEMENTS

- A **Customer Support Agreement** (CSA) is an arrangement between the end user and the Cat Dealer that helps lower the cost per unit of production.
- Agreements are tailored to fit your business needs and can range from simple Preventive Maintenance Kits to sophisticated Total Cost Performance Guarantees.
- Trained dealer technicians assist you by maintaining your equipment and driving down operating costs. Perhaps the most important feature of any CSA is flexibility.
- A **Preventive Maintenance** (PM) agreement covers specified maintenance at a fixed cost. You maintain reliability and efficiency because the maintenance is performed by highly skilled technicians at guaranteed costs, giving you the ability to budget more accurately.
- A **Total Maintenance and Repair** (TM&R) agreement covers all of the maintenance and repair costs. Instead of paying for maintenance or repairs as they are needed, you pay one flat rate to cover a broad range of parts and services.

Check with your local Cat dealer for available options with each agreement.

	PM	TM&R
Detailed inspections by highly skilled technicians	✔	✔
Scheduled maintenance	✔	✔
Labor and travel costs	✔	✔
Use of genuine Cat parts, fluids and filters	✔	✔
S•O•S℠ Services and interpretation	✔	✔
Component repairs		✔
All unscheduled repairs, including wear out, with no exclusions, limitations or deductibles		✔

NOTES

NOTES